SMART DISPLAY SPECIFICATION



WINSTAR Display Co.,Ltd.

華凌光電股份有限公司

Represented by:

FIRST Components s.r.l.
www.first-components.com
technical@first-components.com
+39 0332 1888005

SPECIFICATION

CUSTOMER : _____

MODEL NO. : WL0F0007000A8GAACSA00-FC

APPROVED BY: (FOR CUSTOMER USE ONLY)	

SALES BY	APPROVED BY	CHECKED BY	PREPARED BY
		Paul Chen Wenhao Liao	Debby Hsu

VERSION	DATE	REVISED PAGE NO.	SUMMARY
N	2023/03/25		First Issue

Winstar Display Co., LTD
華凌光電股份有限公司

MODLE NO：

RECORDS OF REVISION			DOC. FIRST ISSUE
VERSION	DATE	REVISED PAGE NO.	**SUMMARY**
0	2023/03/25		First issue

first FC components

Summary

7 Inch Smart Display (CAN series) Features

1. +12V power supply input, the power consumption is around 6W.
2. Self testing after booting function.
3. CAN bus communication interface.
4. Support Custom CAN ID protocol, default baud rate is 250KB.
5. Built in flash memory, store the font and Object Dictionary Data.
6. Support capacitive touch panel (CTP).
7. Embedded buzzer controlled by Master Device.
8. HOST can be used on multiple platforms, such as Computer (with USB to CAN Dongle), MCU, Raspberry Pi (with PiCAN2).

first FC components

Product information

General information

Item	Standard Value	Unit
Operating voltage	5~16V	Vdc
Communication Interface	CAN bus	N/A
MCU	STM32F746 216MHz	N/A
Flash Memory	16	MB
SDRAM Frequency	166	MHz
LCD display size	7.0	inch
Dot Matrix	1024 x RGBx600(TFT)	dot
Module dimension	169.9(W) x 103.4(H) x 5.6(D)	mm
Active area	154.2144 x 85.92	mm
Dot pitch	0.1506 x 0.1432	mm
Brightness	Min: 400; Typ: 450	cd/m^2
LCD type	TFT, Normally Black, Transmissive	
View Direction	85/85/85/85	
Aspect Ratio	16:9	
With /Without TP	With CTP	
Surface	Glare	

first components

Contour Drawing

POWER JACK

2 — ◎ — 1

(GND) (12V)

CON3

PIN	SYMBOL
1	+3V3
2	SWCLK
3	GND
4	SWDIO
5	NRST
6	GND
7~16	NC

CON2

PIN	SYMBOL	PIN	SYMBOL
1	+12V	9	Reserve
2	GND	10	Reserve
3	CAN_H	11	Reserve
4	CAN_L	12	GND
5	GND	13	Reserve
6	GND	14	NC
7	NC	15	NC
8	NC	16	GND

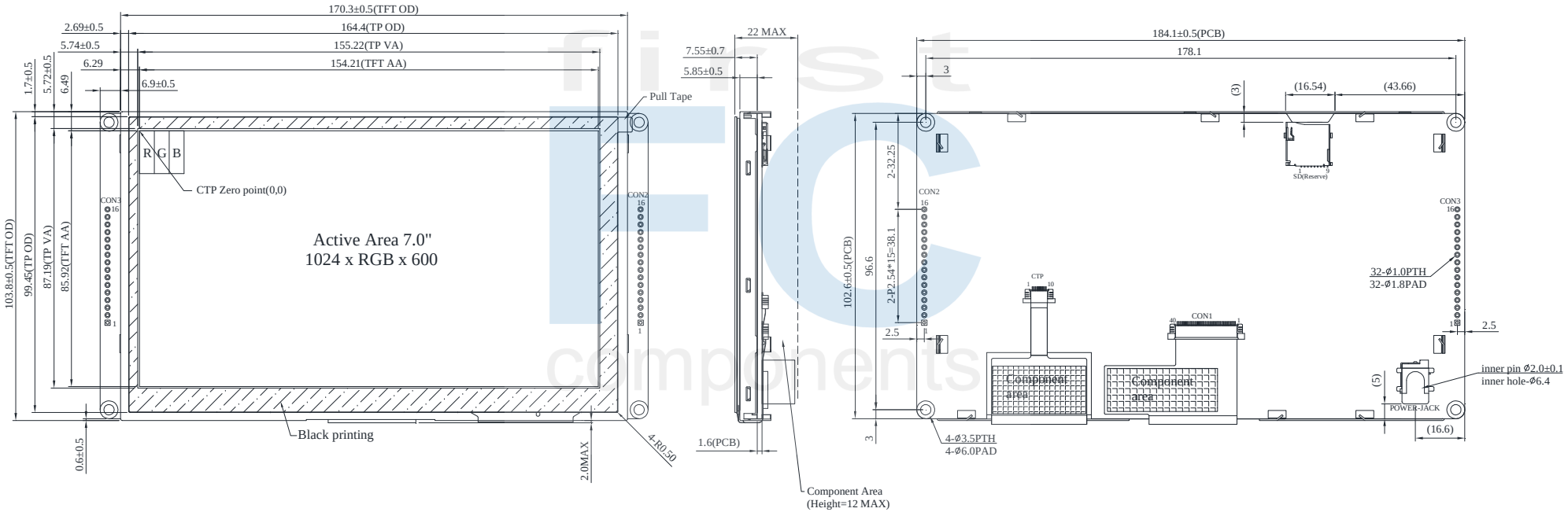

The non-specified tolerance of dimension is ±0.3mm.

Absolute Maximum Ratings

Item	Symbol	Min	Typ	Max	Unit
Operating Temperature	TOP	-20	—	+70	℃
Storage Temperature	TST	-30	—	+80	℃

Note: Device is subject to be damaged permanently if stresses beyond those absolute maximum ratings listed above
1. Temp. ≦60℃, 90% RH MAX. Temp.＞60℃, Absolute humidity shall be less than 90% RH at 60℃

Electrical Characteristics

Item	Symbol	Condition	Min	Typ	Max	Unit
Supply Voltage	VCI	—	8	12	16	V
Supply current	I(mA)	—	—	490	—	mA

BOM

Item	Description	Remark
LCM	WF70-1024600A8L#BP3-FC	
PCBA	SV10007R00AAA00N0100	

Block diagram

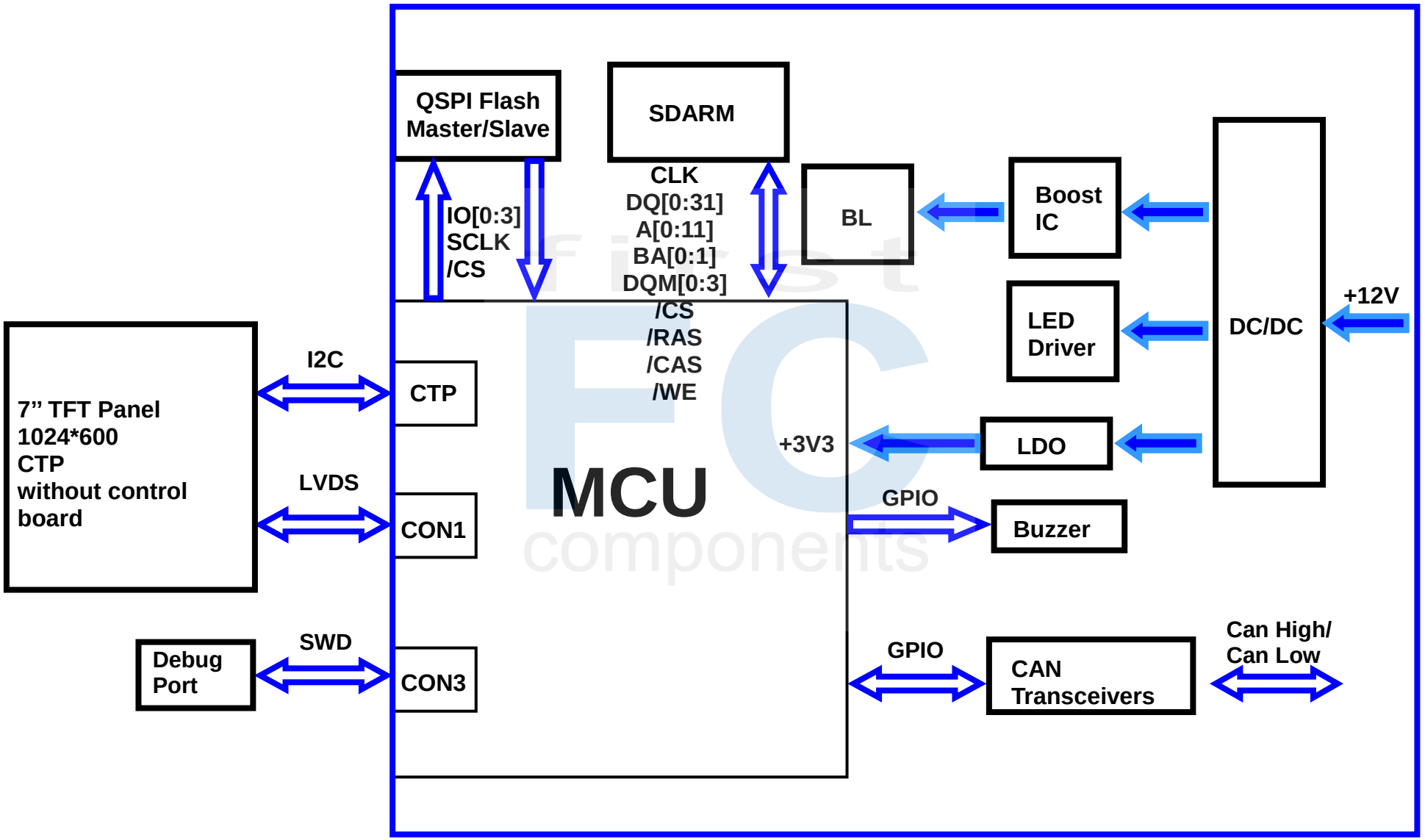

Interface

CON2 definition:

Pin	Symbol	Function	Remark
1	+12V	Power supply12V input	Input
2	GND	Power supply GND input	Input
3	CAN_High	CAN bus D+	I/O
4	CAN_Low	CAN bus D-	I/O
5	GND	Power supply GND input	Input
6	GND	Power supply GND input	Input
7	NC	_	_
8	NC	_	_
9	Reserve	_	_
10	Reserve	USART RX interface(Reserve)	Reserve
11	Reserve	USART TX interface(Reserve)	Reserve
12	GND	GND	GND
13	Reserve	_	_
14	NC	_	_
15	NC	_	_
16	GND	GND	GND

first FC components

CON3 definition:

Pin	Symbol	Function	Remark
1	+3V3	3.3V power for JTAG interface	Output
2	SWCLK	CLK pin for JTAG interface	Input
3	GND	GND for JTAG interface	Output
4	SWDIO	Data pin for JTAG interface	I/O
5	NRST	Reset pin for JTAG interface	Input
6	GND	GND	Output
7~16	NC	_	_

first FC components

Reliability

Content of Reliability Test (Wide temperature, -20℃~70℃)

Environmental Test			
Test Item	Content of Test	Test Condition	Note
High Temperature storage	Endurance test applying the high storage temperature for a long time.	80℃ 200hrs	2
Low Temperature storage	Endurance test applying the low storage temperature for a long time.	-30℃ 200hrs	1,2
High Temperature Operation	Endurance test applying the electric stress (Voltage & Current) and the thermal stress to the element for a long time.	70℃ 200hrs	———
Low Temperature Operation	Endurance test applying the electric stress under low temperature for a long time.	-20℃ 200hrs	1
High Temperature/ Humidity Operation	The module should be allowed to stand at 40℃,90%RH max	60℃,90%RH 96hrs	1,2
Thermal shock resistance	The sample should be allowed stand the following 10 cycles of operation -20℃ 25℃ 70℃ 30min 5min 30min 1 cycle	-20℃/70℃ 10 cycles	———
Vibration test	Endurance test applying the vibration during transportation and using.	Total fixed amplitude : 1.5mm Vibration Frequency : 10~55Hz One cycle 60 seconds to 3 directions of X,Y,Z for Each 15 minutes	3
Static electricity test	Endurance test applying the electric stress to the terminal.	VS=±2KV~±6KV(contact),±2KV~±8KV (air), RS=330Ω CS=150pF 10 times	———

Note1: No dew condensation to be observed.

Note2: The function test shall be conducted after 4 hours storage at the normal Temperature and humidity after remove from the test chamber.

Note3: The packing have to including into the vibration testing.

Product inspection check list

Check samples by meter V_{IN}, I_{system}

Item	No 1	No 2	No 3	Note
V_{IN} (V)	12.1	12.1	12.1	
I_{System} (mA)	550	548	538	

Check sample Reliability Test

Item	Result	Note
Thermal shock	_	-20℃/70℃ 20 cycles
High Temperature Operation	_	70℃ 96hrs
Low Temperature Operation	_	-20℃ 96hrs
Static electricity test	_	VS=±2KV~±6KV(contact),±2KV~±8KV (air), RS=330Ω CS=150pF 10 times
Vibration test	_	Total fixed amplitude : 1.5mm Vibration Frequency : 10~55Hz One cycle 60 seconds to 3 directions of X,Y,Z for Each 15 minutes

- Prepare sets for testing

first components