SMART DISPLAY SPECIFICATION



WINSTAR Display Co.,Ltd.
華凌光電股份有限公司

Represented by:

first FC components
FIRST Components s.r.l.
www.first-components.com
technical@first-components.com
+39 0332 1888005

SPECIFICATION

CUSTOMER : _____

MODEL NO. : WL0F00050000FGAADSA00-FC

APPROVED BY: (FOR CUSTOMER USE ONLY)	

SALES BY	APPROVED BY	CHECKED BY	PREPARED BY
		Eason Chang ShiWei Yang	Debby Hsu

VERSION	DATE	REVISED PAGE NO.	SUMMARY
0	2023/03/22		First issue

RECORDS OF REVISION			DOC. FIRST ISSUE
VERSION	DATE	REVISED PAGE NO.	**SUMMARY**
0	2023/03/22		First issue

first FC components

Summary

5 Inch Smart Display Feature

1. DC 5V working voltage.
2. Self-testing after booting function.
3. CAN bus communication interface.
4. Supports Custom CAN ID protocol, default baud rate at 250KB.
5. Built in 16M external flash memory to store the font and Object Dictionary Data.
6. Support capacitive touch panel (CTP).
7. Smart Display scenario is slave device and controlled by Master Device's instruction.
8. Build in buzzer and can be controlled by Master Device.
9. Demo set HOST can be used on multiple platforms, such as Computer (with USB to CAN Dongle), MCU, Raspberry Pi (with PiCAN2).

first FC components

Product information

General information

Item	Standard Value	Unit
Operating voltage	5	Vdc
Communication Interface	CAN bus differential ± 3.3	Vpp
MCU	STM32F750	N/A
Flash Memory	16	MB
SDRAM Frequency	108	MHz
LCD display size	5.0	inch
Dot Matrix	800× 3(RGB) × 480	dot
Module dimension	132.7(W) ×75.8(H) ×12.5	mm
Active area	108(W) ×64.8 (H)	mm
Dot pitch	0.135(W) ×0.135(H)	mm
Brightness	Min: 300; Typ: 400	cd/m^2
LCD type	TFT, Normally White, Transmissive	
View Direction	80/80/80/80	
Aspect Ratio	5:3	
With /Without TP	With CTP	
Surface	Glare	

first FC components

Contour Drawing

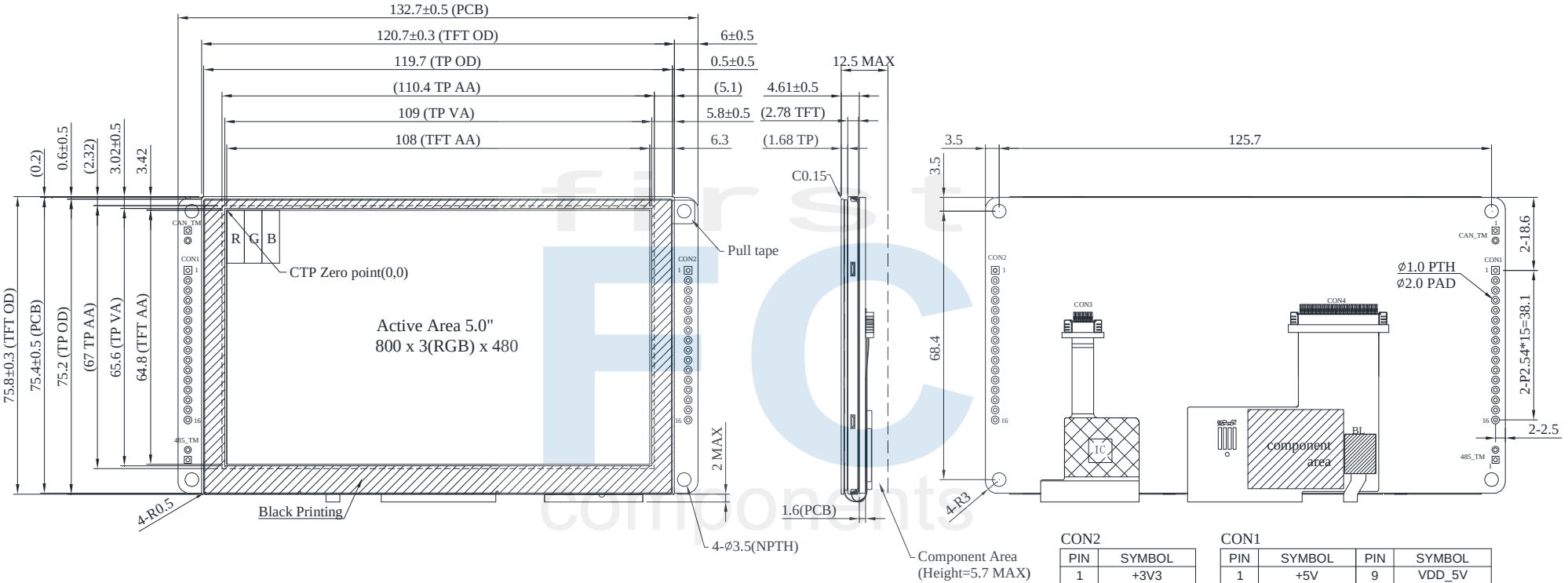

CON2

PIN	SYMBOL
1	+3V3
2	SWCLK
3	GND
4	SWDIO
5	NRST
6	GND
7~16	NC

CON1

PIN	SYMBOL	PIN	SYMBOL
1	+5V	9	VDD_5V
2	GND	10	Reserve
3	CAN_H	11	Reserve
4	CAN_L	12	GND
5	VDD_5V	13	VDD_5V
6	NC	14	NC
7	NC	15	NC
8	GND	16	GND

The non-specified tolerance of dimension is ±0.3 mm.

Absolute Maximum Ratings

Item	Symbol	Min	Typ	Max	Unit
Operating Temperature	TOP	-30	—	+80	℃
Storage Temperature	TST	-30	—	+80	℃

Note: Device is subject to be damaged permanently if stresses beyond those absolute maximum ratings listed above
1. Temp. ≦60℃, 90% RH MAX. Temp.＞60℃, Absolute humidity shall be less than 90% RH at 60℃

Electrical Characteristics

Item	Symbol	Min	Typ	Max	Unit
Supply Voltage	VCC	4.75	5	5.25	V
Supply Current	ICC		430		mA

BOM

Item	Description	Remark
LCM	WF50-800480FD#0PW3-FC	
PCBA	SV10005R000FF00N0100	

Block diagram

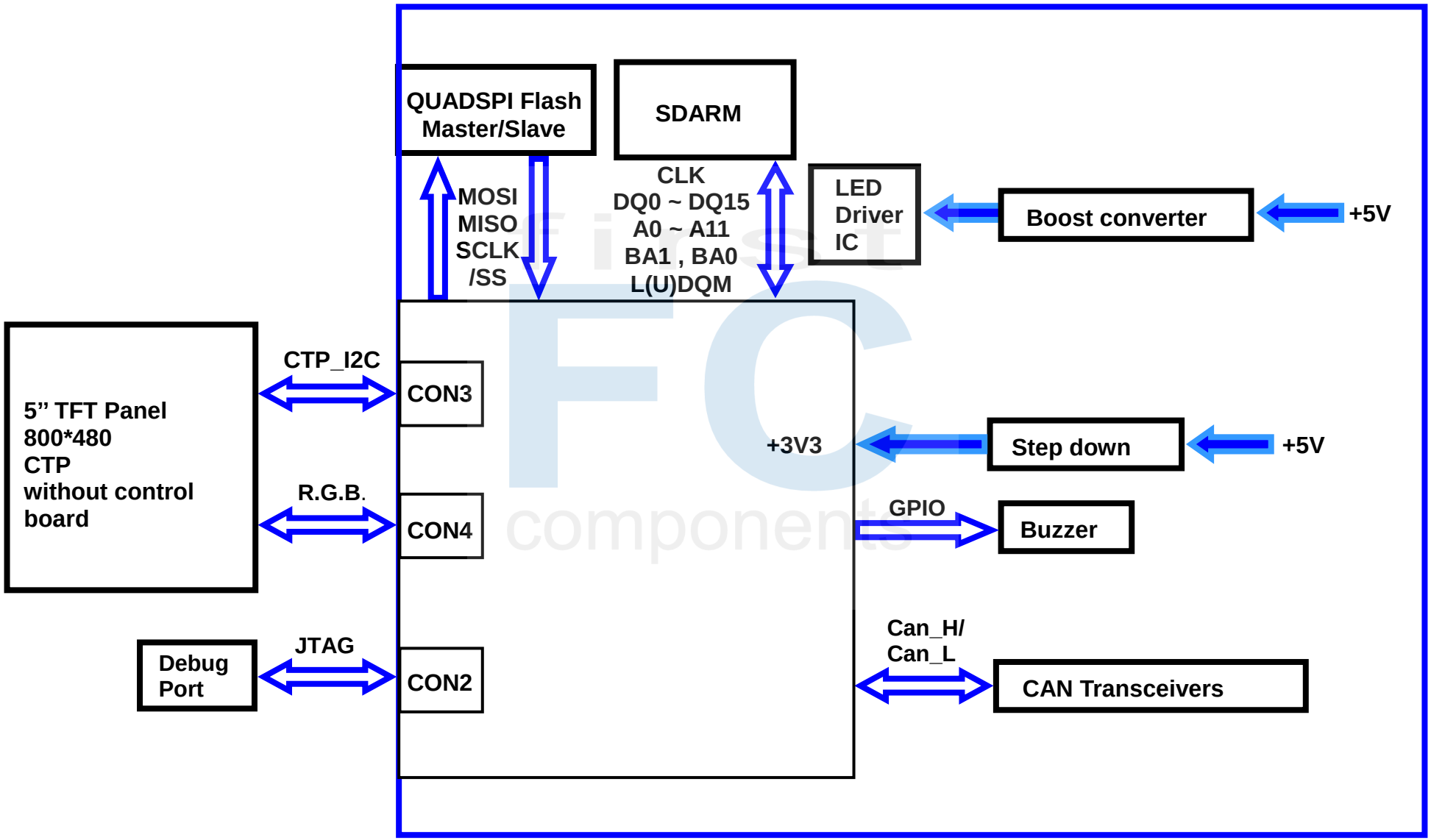

Interface

CON1 definition:

Pin	Symbol	Function	Remark
1	+5V	Power supply 5V input	Input
2	GND	Power supply GND input	Input
3	CAN_H	CAN bus D+	I/O
4	CAN_L	CAN bus D-	I/O
5	VDD_5V	Power supply 5V input	Input
6	NC	--	-
7	NC	--	-
8	GND	Power supply GND input	Input
9	VDD_5V	Power supply 5V input	Input
10	Reserve	USART RX interface(Reserve)	Reserve
11	Reserve	USART TX interface(Reserve)	Reserve
12	GND	Power supply GND input	Input
13	VDD_5V	Power supply 5V input	Input
14	NC	--	-
15	NC	--	-
16	GND	Power supply GND input	Input

CON2 definition:

Pin	Symbol	Function	Remark
1	+3V3	3.3V power for JTAG interface	Output
2	SWCLK	CLK pin for JTAG interface	Input
3	GND	GND for JTAG interface	Output
4	SWDIO	Data pin for JTAG interface	I/O
5	NRST	Reset pin for JTAG interface	Input
6	GND	GND	Output
7-16	NC	--	-

First components

Reliability

Content of Reliability Test (Super Wide temperature, -30℃~80℃)

Environmental Test			
Test Item	Content of Test	Test Condition	Note
High Temperature storage	Endurance test applying the high storage temperature for a long time.	80℃ 96hrs	2
Low Temperature storage	Endurance test applying the low storage temperature for a long time.	-30℃ 96hrs	1,2
High Temperature Operation	Endurance test applying the electric stress (Voltage & Current) and the thermal stress to the element for a long time.	80℃ 240hrs	———
Low Temperature Operation	Endurance test applying the electric stress under low temperature for a long time.	-30℃ 240hrs	1
High Temperature/ Humidity Operation	The module should be allowed to stand at 60℃,90%RH max	60℃,90%RH 96hrs	1,2
Thermal shock resistance	The sample should be allowed stand the following 10 cycles of operation -30℃ 25℃ 80℃ 30min 5min 30min 1 cycle	-30℃/80℃ 10 cycles	———
Vibration test	Endurance test applying the vibration during transportation and using.	Total fixed amplitude : 1.5mm Vibration Frequency : 10~55Hz One cycle 60 seconds to 3 directions of X,Y,Z for Each 15 minutes	3
Static electricity test	Endurance test applying the electric stress to the terminal.	VS=±2KV~±6KV(contact),±2KV~±8KV(air), RS=330Ω CS=150pF 10 times	———

Note1: No dew condensation to be observed.

Note2: The function test shall be conducted after 4 hours storage at the normal Temperature and humidity after remove from the test chamber.

Note3: The packing have to including into the vibration testing.

Product inspection check list

Check samples by meter V_{IN}, I_{system}

Item	No 1	No 2	No 3	Note
V_{IN} (V)	5	5	5	
I_{System}(mA)	435	437	439	

Check sample Reliability Test

- Prepare sets for testing

Environmental Test			
Test Item	Content of Test	Test Condition	Note
High Temperature Operation	Endurance test applying the electric stress (Voltage & Current) and the thermal stress to the element for a long time.	80℃ 240hrs	———
Low Temperature Operation	Endurance test applying the electric stress under low temperature for a long time.	-30℃ 240hrs	1
High Temperature/ Humidity Operation	The module should be allowed to stand at 60℃,90%RH max	60℃,90%RH 96hrs	1,2
Thermal shock resistance	The sample should be allowed stand the following 10 cycles of operation -30℃ 25℃ 80℃ 30min 5min 30min 1 cycle	-30℃/80℃ 10 cycles	———
Vibration test	Endurance test applying the vibration during transportation and using.	Total fixed amplitude : 1.5mm Vibration Frequency : 10~55Hz One cycle 60 seconds to 3 directions of X,Y,Z for Each 15 minutes	3
Static electricity test	Endurance test applying the electric stress to the terminal.	VS=±2KV~±6KV(contact),±2KV~±8KV(air), RS=330Ω CS=150pF 10 times	———