SMART DISPLAY SPECIFICATION



WINSTAR Display Co.,Ltd.
華凌光電股份有限公司

Represented by:

first FC components
FIRST Components s.r.l.
www.first-components.com
technical@first-components.com
+39 0332 1888005

SPECIFICATION

MODEL NO. : WL0F00050000FGDABSA00-FC

Summary

5 Inch Smart Display Feature

1. DC 5V working voltage.
2. Self-testing after booting function.
3. RS485 communication interface with Modbus protocol.
4. Built in 16M external flash memory to store the font and Object Dictionary Data.
5. Support capacitive touch panel (CTP).
6. Build in buzzer and can be controlled by Master Device.
7. Demo set HOST can be used on multiple platforms, such as Computer (with USB to RS485 Dongle), MCU.

First components

Product information

General information

Item	Standard Value	Unit
Operating voltage	5	Vdc
Communication Interface	RS485 differential	-
MCU	STM32F750	N/A
Flash Memory	16	MB
SDRAM Frequency	108	MHz
LCD display size	5.0	inch
Dot Matrix	800× 3(RGB) × 480	dots
Module dimension	132.7(W) ×75.8(H) ×12.5(D)	mm
Active area	108(W) ×64.8 (H)	mm
Pixel pitch	0.135(W) ×0.135(H)	mm
Brightness	Min: 300; Typ: 400	cd/m^2
LCD type	TFT, Normally Black, Transmissive	
View Direction	80/80/80/80	
Aspect Ratio	5:3	
With /Without TP	With CTP	
Surface	Glare	

first FC components

Contour Drawing

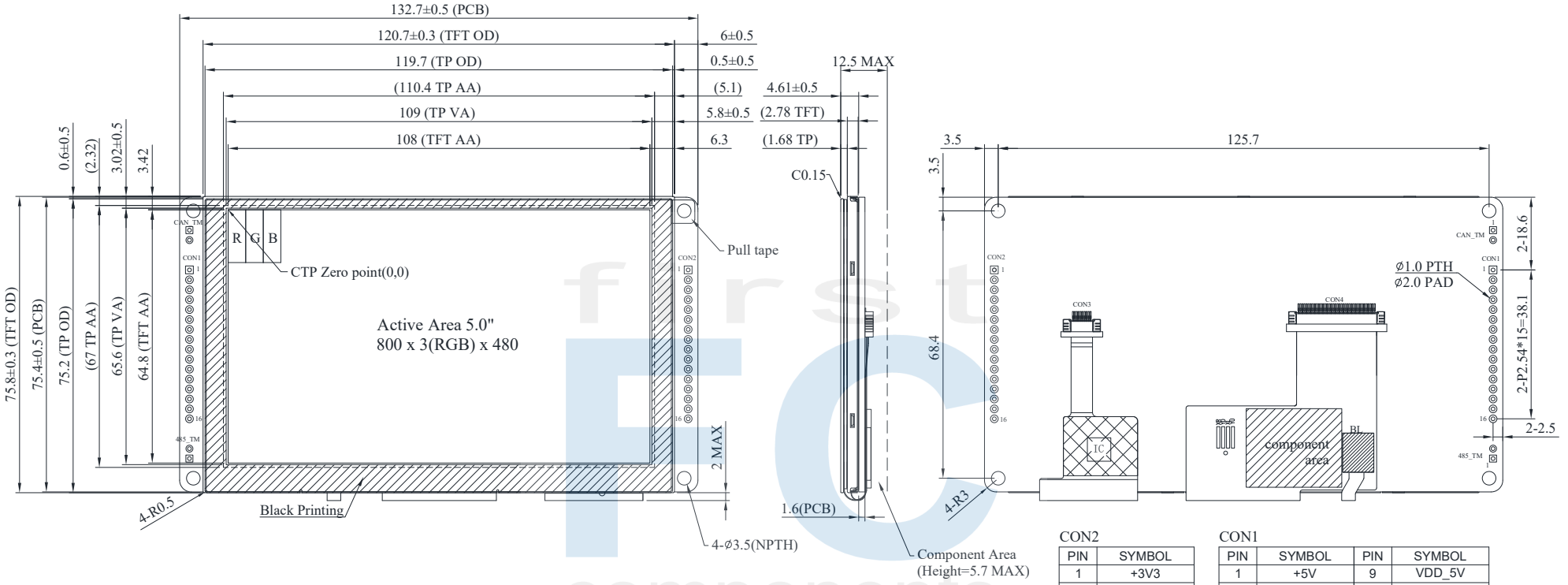

CON2

PIN	SYMBOL
1	+3V3
2	SWCLK
3	GND
4	SWDIO
5	NRST
6	GND
7~16	NC

CON1

PIN	SYMBOL	PIN	SYMBOL
1	+5V	9	VDD_5V
2	GND	10	Reserve
3	NC	11	Reserve
4	NC	12	GND
5	VDD_5V	13	VDD_5V
6	NC	14	RS485_B
7	NC	15	RS485_A
8	GND	16	GND

The non-specified tolerance of dimension is ±0.3 mm.

Absolute Maximum Ratings

Item	Symbol	Min	Typ	Max	Unit
Operating Temperature	TOP	-30	—	+80	℃
Storage Temperature	TST	-30	—	+80	℃

Electrical Characteristics

Item	Symbol	Min	Typ	Max	Unit
Supply Voltage	VCC	4.75	5	5.25	V
Supply Current	ICC		440		mA

BOM

Item	Description
LCM	WF50FTWAGDNG0#
PCBA	SV10005R000FF00N0102

first FC components

Interface

CON1 definition:

Pin	Symbol	Function	Remark
1	+5V	Power supply 5V input	Input
2	GND	Power supply GND input	Input
3	NC	--	-
4	NC	--	-
5	VDD_5V	Power supply 5V input	Input
6	NC	--	-
7	NC	--	-
8	GND	Power supply GND input	Input
9	VDD_5V	Power supply 5V input	Input
10	Reserve	UART RX interface(Reserve)	Reserve
11	Reserve	UART TX interface(Reserve)	Reserve
12	GND	Power supply GND input	Input
13	VDD_5V	Power supply 5V input	Input
14	RS485_B	RS485 DATA-	I/O
15	RS485_A	RS485 DATA+	I/O
16	GND	Power supply GND input	Input

CON2 definition:

Pin	Symbol	Function	Remark
1	+3V3	3.3V power for JTAG interface	Output
2	SWCLK	CLK pin for JTAG interface	Input
3	GND	GND for JTAG interface	Output
4	SWDIO	Data pin for JTAG interface	I/O
5	NRST	Reset pin for JTAG interface	Input
6	GND	GND	Output
7-16	NC	--	-